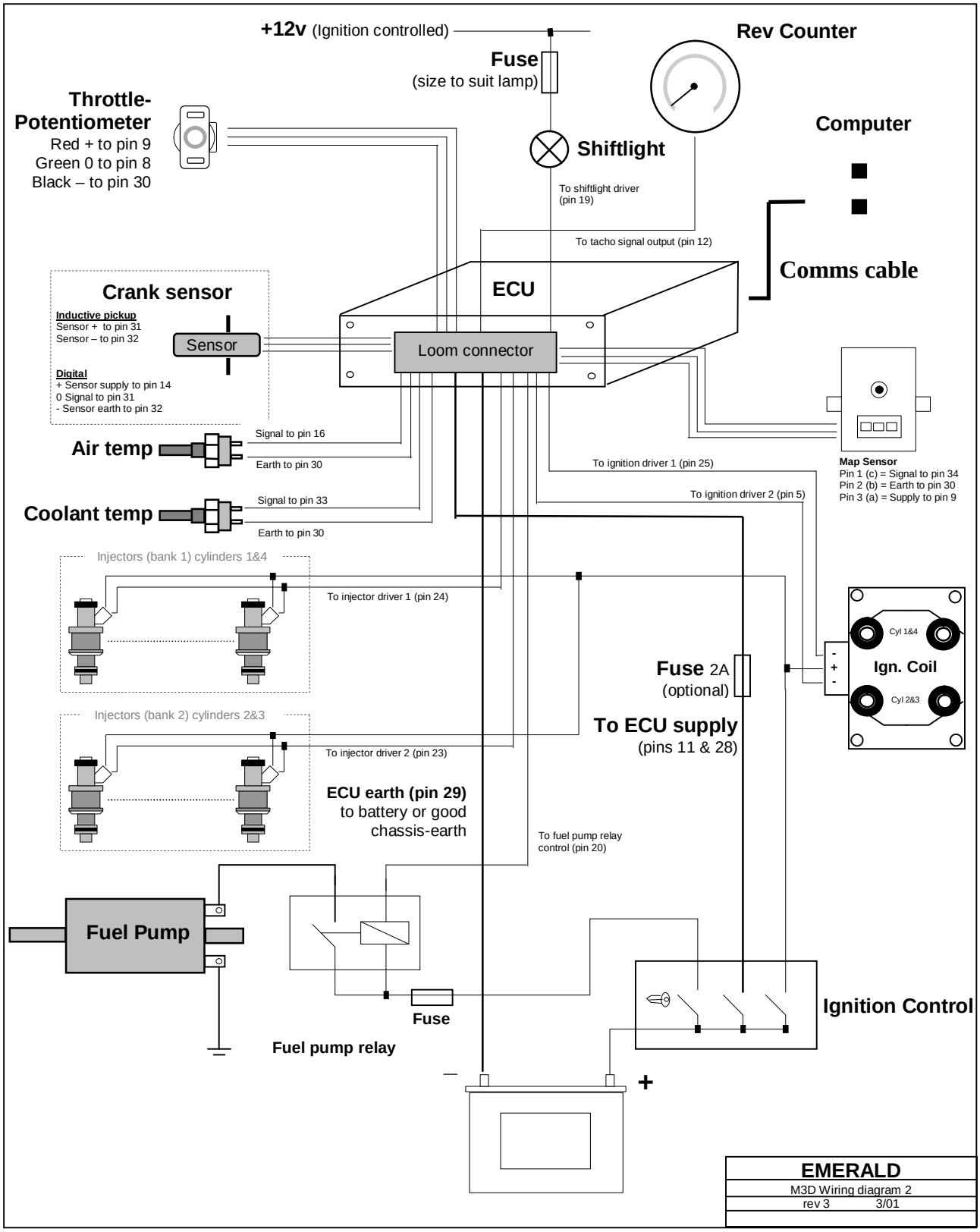Wiring example - typical distributorless system