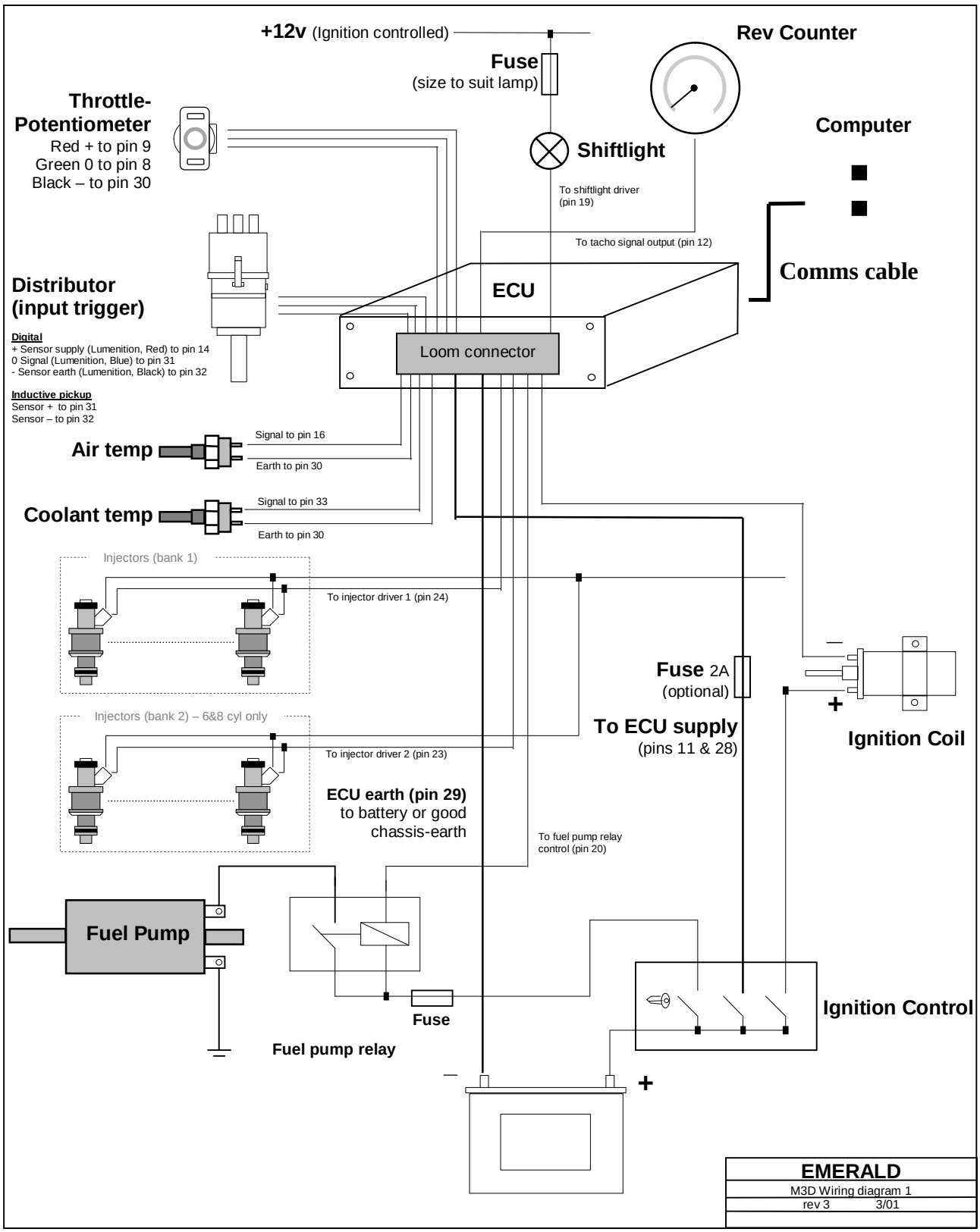Wiring example - typical distributor based system